Installation Manual

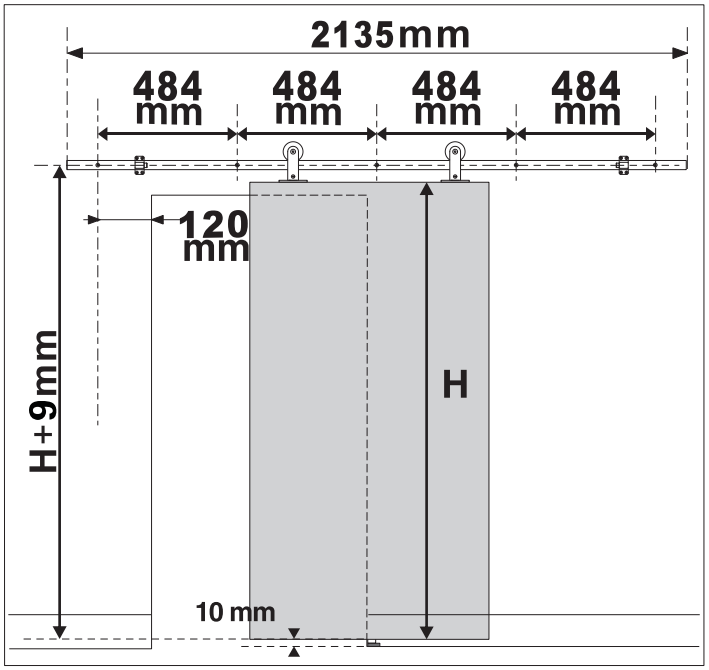

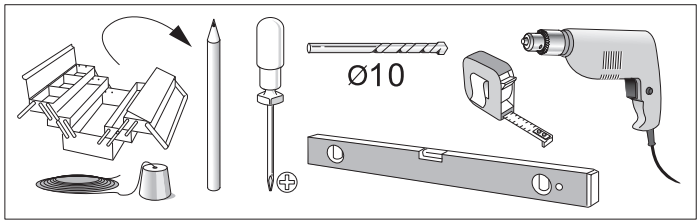

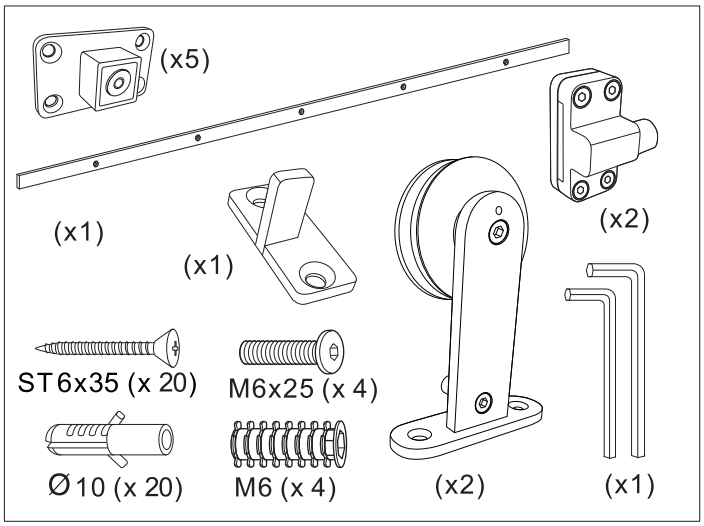

1

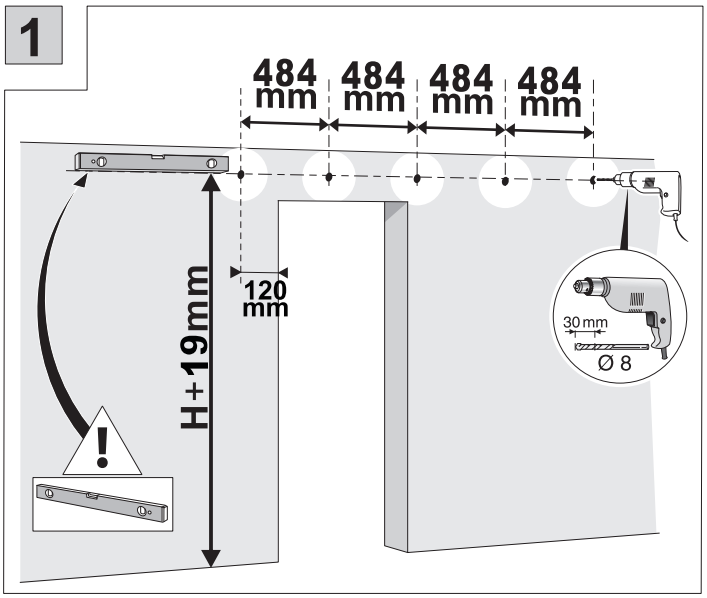

3

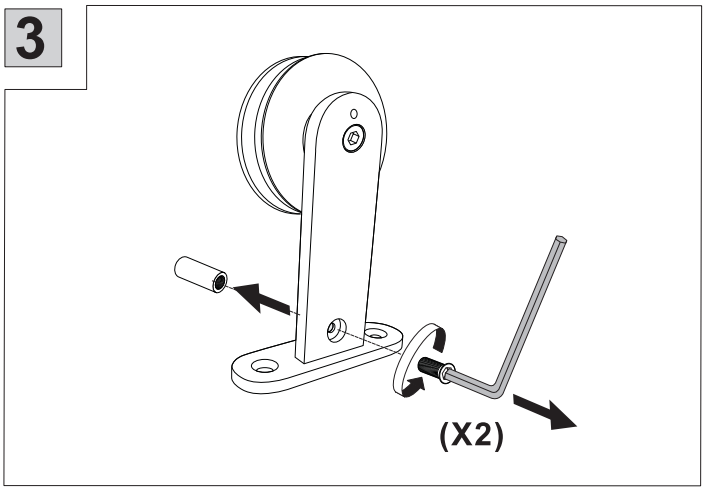

2

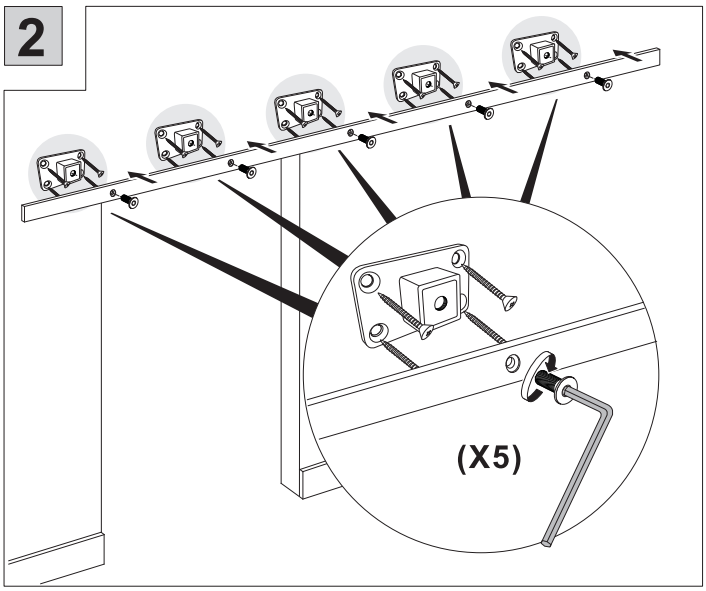

4

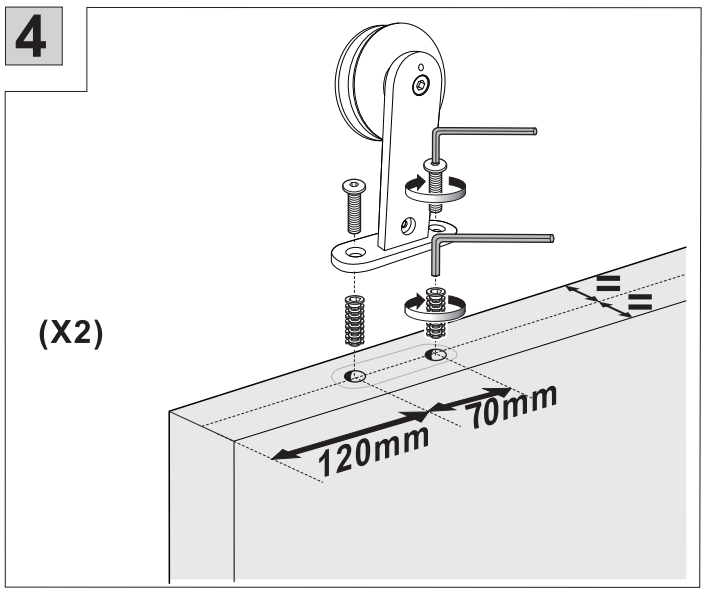

5

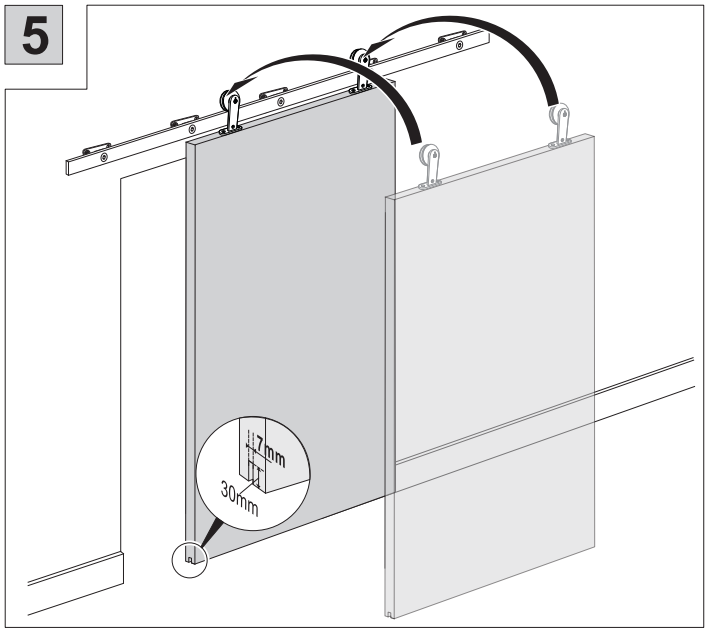

6

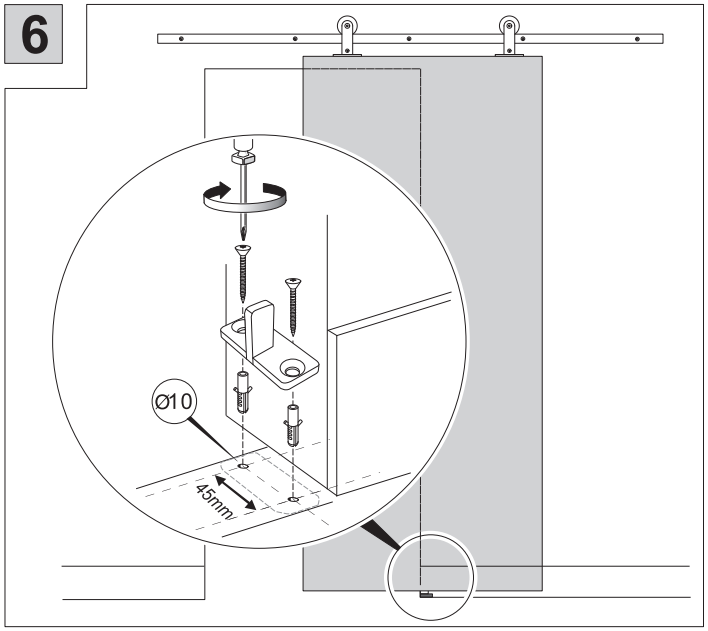

7

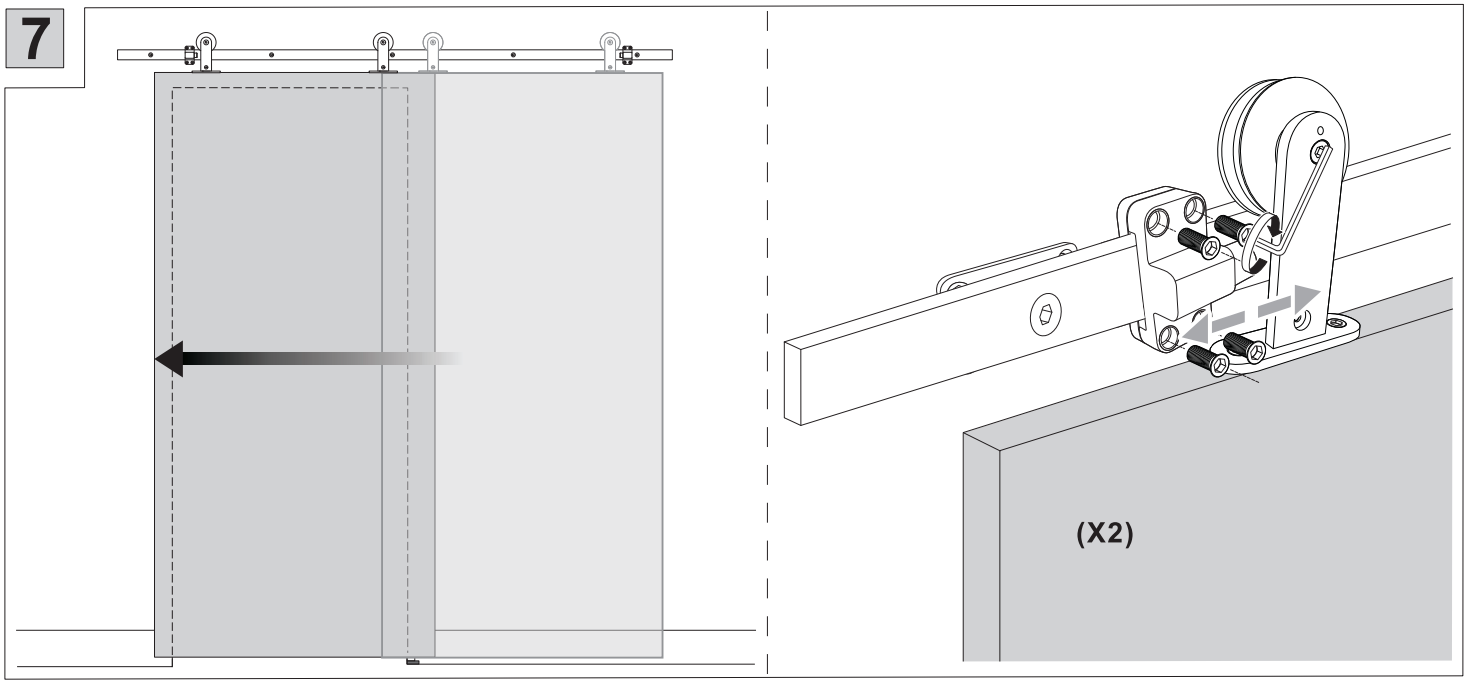
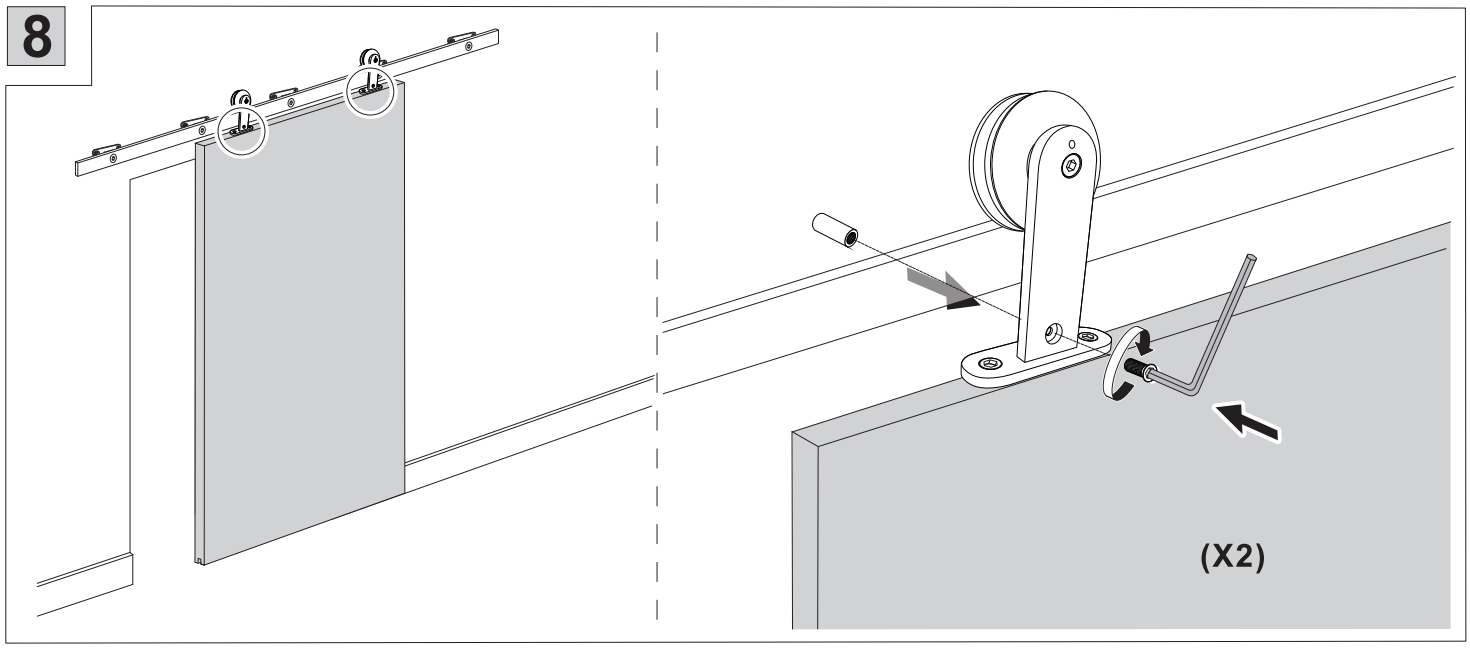
8